PEQUEA
A SKIBO COMPANY

TT6202 Rotary Tedder

Illustrated Parts Breakdown

Page 1 Tongue Assembly
Page 2 Center Assembly
Page 3 Center Assembly Cont.
Page 4 Left Middle Wing Assembly
Page 5 Left Outer Wing Assembly
Page 6 Right Middle Wing Assembly
Page 7 Right Outer Wing Assembly
Page 8 Torsion Axle Assembly
Page 9 Outer Axle Assembly
Page 10 Input Gearbox Assembly
Page 11 Rotor Gearbox Assembly
Page 12 Tine And Tine arm Assembly
Page 13 Hydraulics

03/04/22

Tongue Assembly

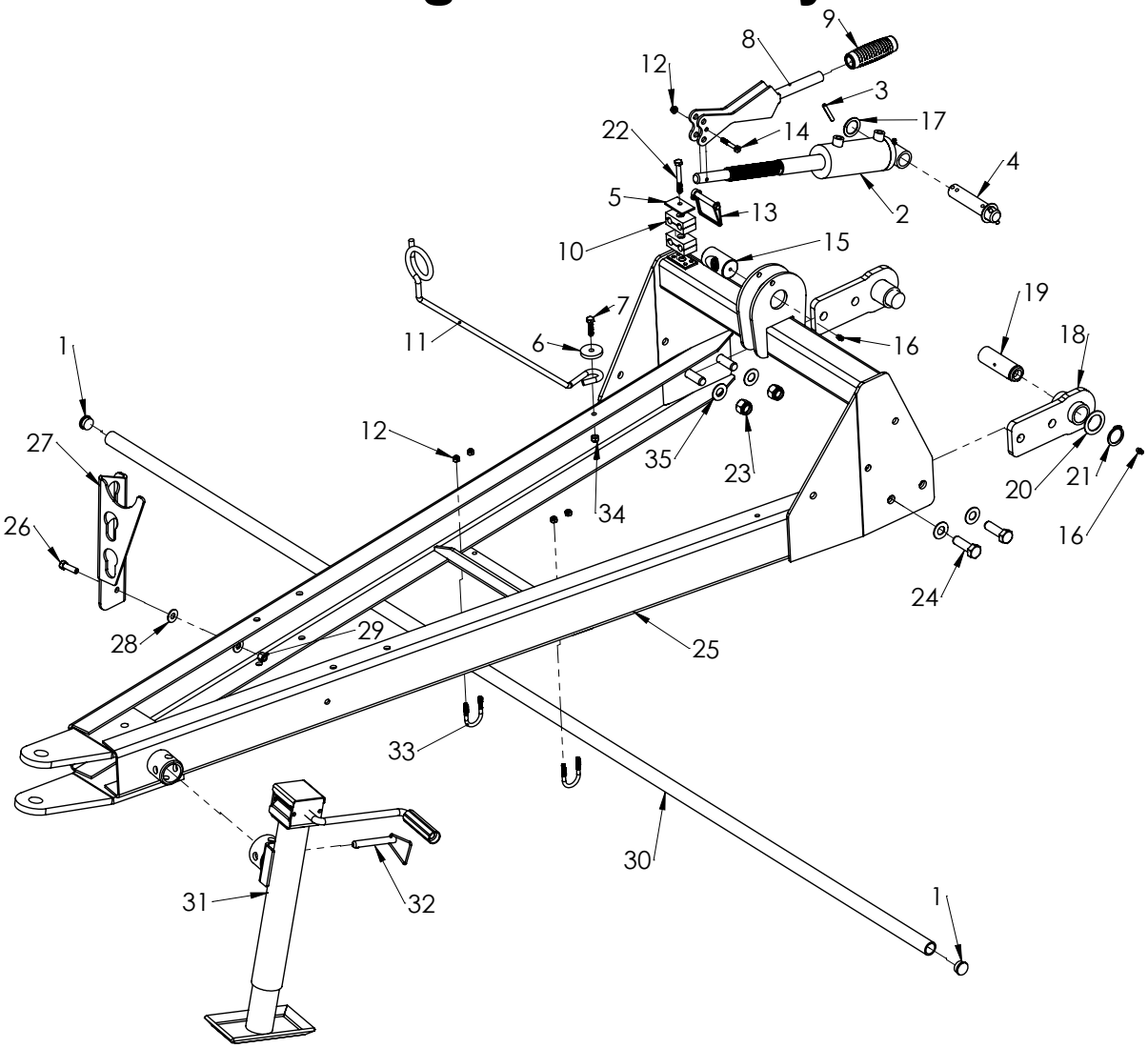

Ref#	Description	Part#
1	3/4" Pipe Cap	100297
2	Front Tilt Cylinder	703604
3	1/4 X 1-3/4" Roll Pin Zinc	500187
4	Cylinder Pin	701016
5	Hose Clamp Top Plate	510630
6	Washer, Hose Support Hold Down	502308
7	5/16-18 X 1-1/4" Hex Head Bolt	000230
8	Tilt Cylinder Handle	706071
9	Rubber Grip	706074
10	1/4" Clamp Block	510632
11	Hose Support	502288
12	1/4” Nylock Nut	003001
13	Snapper Pin	500158
14	1/4-20 X 1-3/4" Hex Head Bolt	000187
15	Tongue Cylinder Mount	502218
16	1/4-28 Special Taper Fitting	400117
17	1 x 1-1/2" Machinery Bushing 1	001008
18	Hitch Bolting Weld Assembly	703484

Ref#	Description	Part#
19	Grease Pin, Tongue Pivot Pin	702829
20	1-1/4 X 1-7/8" Machinery Bushing	500185
21	Snap Ring	702826
22	5/16-18 x 2-1/2" HH Bolt	000118
23	5/8 Nylock Nut	000972
24	5/8-11 X 2" Hex Head Bolt, GR. 5	000615
25	Tongue Weldment	704068
26	3/8-16 X 1-1/4" Hex Head Bolt	000275
27	PTO Stand	704132
28	3/8 USS Flat Washer, Zinc	001035
29	3/8 Nylock Nut	003000
30	Center Pipe Guard 96"	703999
31	Jack, 2K Side Wind Jack	903317
32	Complete PTO Shaft	100748
33	1/4-20 x 3/4” Pipe Zinc U-Bolt	705048
34	5/16-18 Nylon Lock Nut	002999
35	5/8 SAE Standard washer	001076

Center Assembly

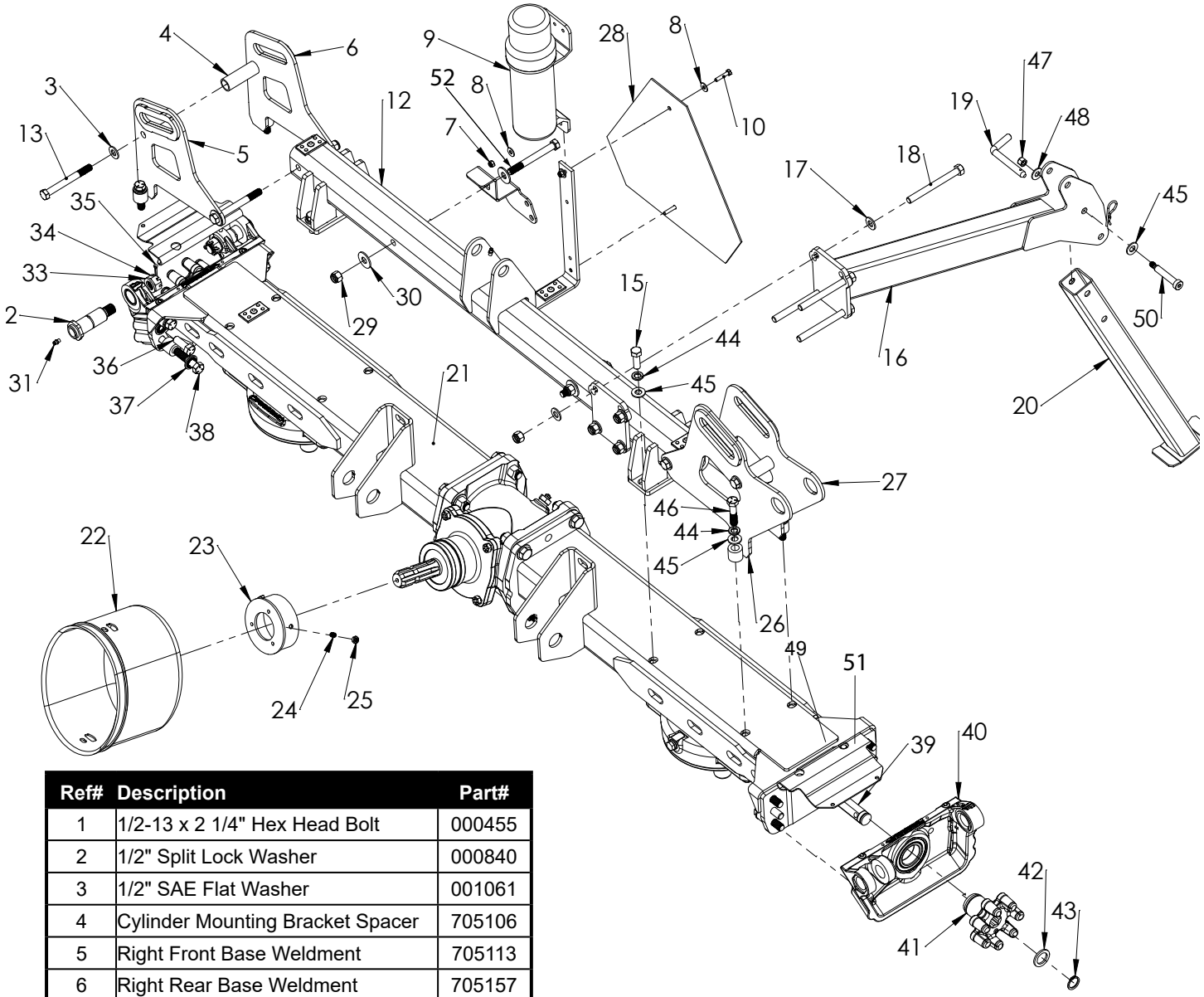

Ref#	Description	Part#
1	1/2-13 x 2 1/4" Hex Head Bolt	000455
2	1/2" Split Lock Washer	000840
3	1/2" SAE Flat Washer	001061
4	Cylinder Mounting Bracket Spacer	705106
5	Right Front Base Weldment	705113
6	Right Rear Base Weldment	705157
7	1/4-20 Nylon Lock Nut	003001
8	1/4 USS Flat Washer	001020
9	Operator's Manual Canister	503050
10	1/4-20 x 1 1/4" HH Bolt, Gr5	000184
11	1/4" Clamp Block	510632
12	Main Body Bridge	705092
13	1/2 x 4 1/2" HH Bolt	000500
14	Drop Leg Bolt Plate	703949
15	1/2 x 1 1/2" HH Bolt, Zinc	000435
16	Bolted Tipping Leg	703946
17	1/2" SAE Flat Washer	001061
18	1/2 x 5" HH Bolt	000510
19	.5 x 4.387 Bent Pull Pin	100330
20	Bottom Swivel Kickstand	703947
21	Center Drive Assembly	704102

Ref#	Description	Part#
22	PTO Shield	701205
23	PTO Shield Mounting Brckt. Weldmt.	703145
24	5/16-24 x 1/2" Set Screw	001121
25	5/16-24 Hex Jam Nut, Zinc	001116
26	Left Front Base Weldment	705156
27	Left Rear Base Weldment	705115
28	Fanny Flag	507166
29	1/2-13 Nylon Lock Nut	000950
30	1/2 USS Flat Washer, Plated	001055
31	1/4-28 Special Taper Fitting	400117
32	Pivot Pin Weldment	705013
33	3/4 x 1 1/4 Machinery Bushing 10GA	400146
34	3/4 Plated Castle Nut	705070

Center Assembly Cont.

Ref#	Description	Part#
35	5/32 x 1 1/2" Cotter Pin	001215
36	9/16-12 x 1 1/2" HH Cap Screw	000577
37	9/16" Serrated Conical Plated	705000
38	9/16-12 x 2 1/2 HH Bolt	000602
39	Center Hex Shaft	706031
40	Pivot Casting	703547
41	7 Finger Drive, Forged	703546
42	1" Machinery Bushing	001006
43	1" Heavy Duty Snap Ring	702883
44	1/2" Split Lock Washer	000840
45	1/2" SAE Flat Washer	001061
46	1/2-13 x 1 1/2" HH Bolt Zinc	000435
47	3/8-16 Nylon Lock Nut	003000
48	3/8 USS Flat Washer	001035
49	1/4-20 x .75 HH Bolt, Zinc	000175
50	1/2" Shoulder Bolt x 2.5"	703772
51	Casting Finger Cover	705026
52	1/2" X 4 1/2" HH Bolt Zinc	000500

Left Middle Wing Assembly

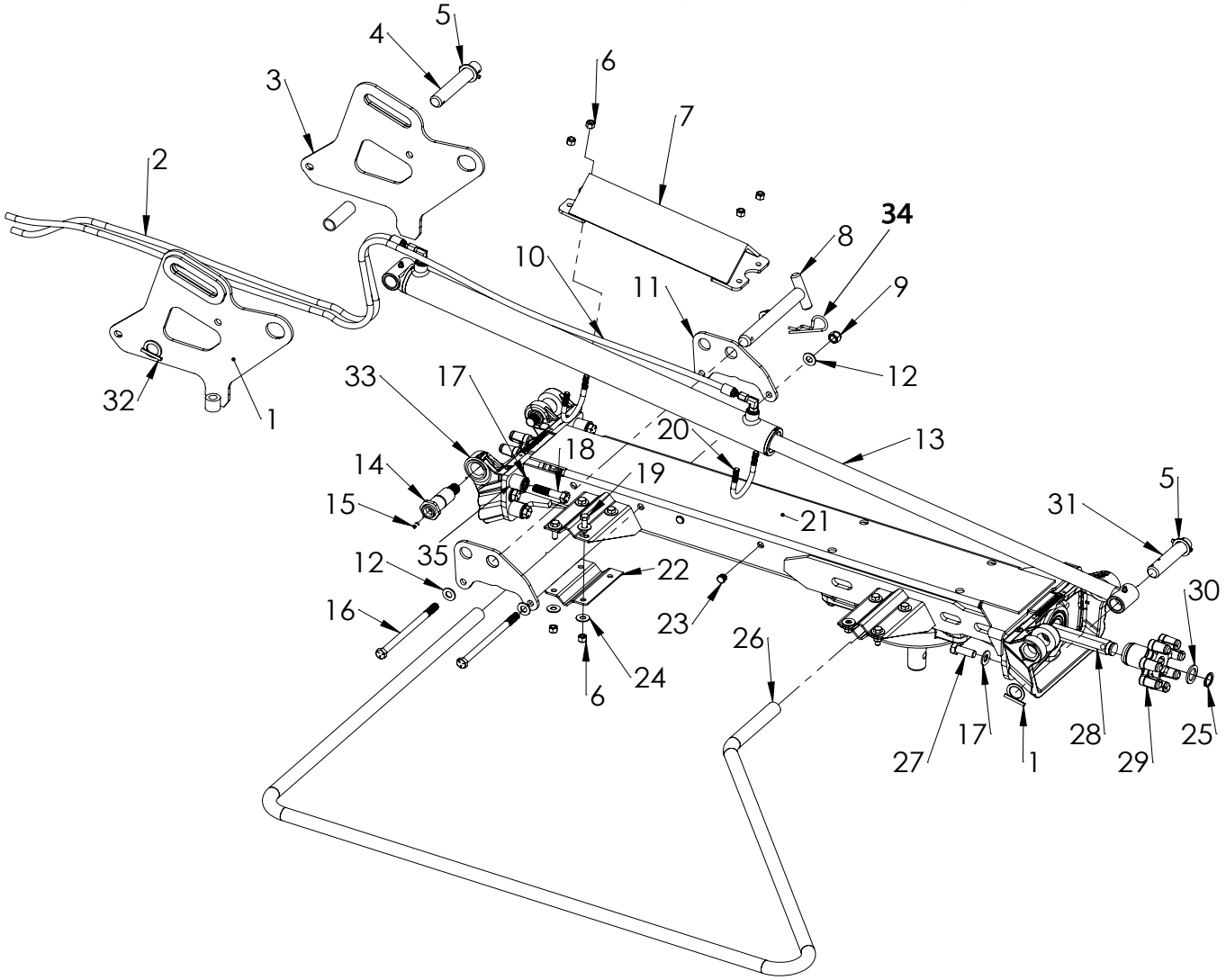

Ref#	Description	Part#
1	1/4 X 1-3/4" Roll Pin, Zinc	500187
2	50" Hose #4 FJX x #4FJX (base end)	705164
3	Left Rear Base Weldment	705115
4	Axel/Cylinder Pin	703252
5	1 X 1-1/2" Machinery Bushing	001006
6	3/8-16 Nylon Locknut, Zinc	003000
7	Hose Guard Weldment	706055
8	Wing Safety Pin Weldment	706044
9	1/2" Nylon Locknut	000950
10	79" Hose #4 FJX x #4FJX (rod end)	705163
11	Bolt On Cylinder Plate	706023
12	1/2" SAE Flat Washer, Zinc	001061
13	2" Bore X 28" Stroke	705116
14	Pivot Pin Weldment	705013
15	1/4-28 Special Taper Fitting	400117
16	1/2-13 X 8" Hex Head Bolt GR.5	000553
17	9/16" Serrated Conical Plated	705000
18	9/16-12 X 2 1/2" Hex Head Bolt	000602

Ref#	Description	Part#
19	3/8-16 X 1-1/4" Hex Head Bolt	000275
20	3/8-16 X 2" Pipe Size Zinc U-Bolt	703423
21	Left Middle Weldment	704123
22	Guard Cradle	702696
23	CCF 5/8-14-20 Pipe Plug	706076
24	3/8 USS Flat Washer, Zinc	001035
25	1" Heavy Duty Ext. Retaining Ring	702883
26	6100/8100/6202 Middle Wing Guard	703263
27	9/16-12 X 1-1/2" Hex Head Bolt	000577
28	6100 Middle Wing Hex Shaft	703051
29	7 Finger Drive, Forged	703546
30	1 X 1-1/2" Machinery Bushing	001006
31	Pin, Cylinder Pin, Inner	701016
32	Left Front Cyl. base	705156
33	Pivot Casting (Machined)	703547
34	.178 X 3 Wire Hairpin Cotter	507340
35	Bolt Ext. Tube	704150

Left Outer Wing

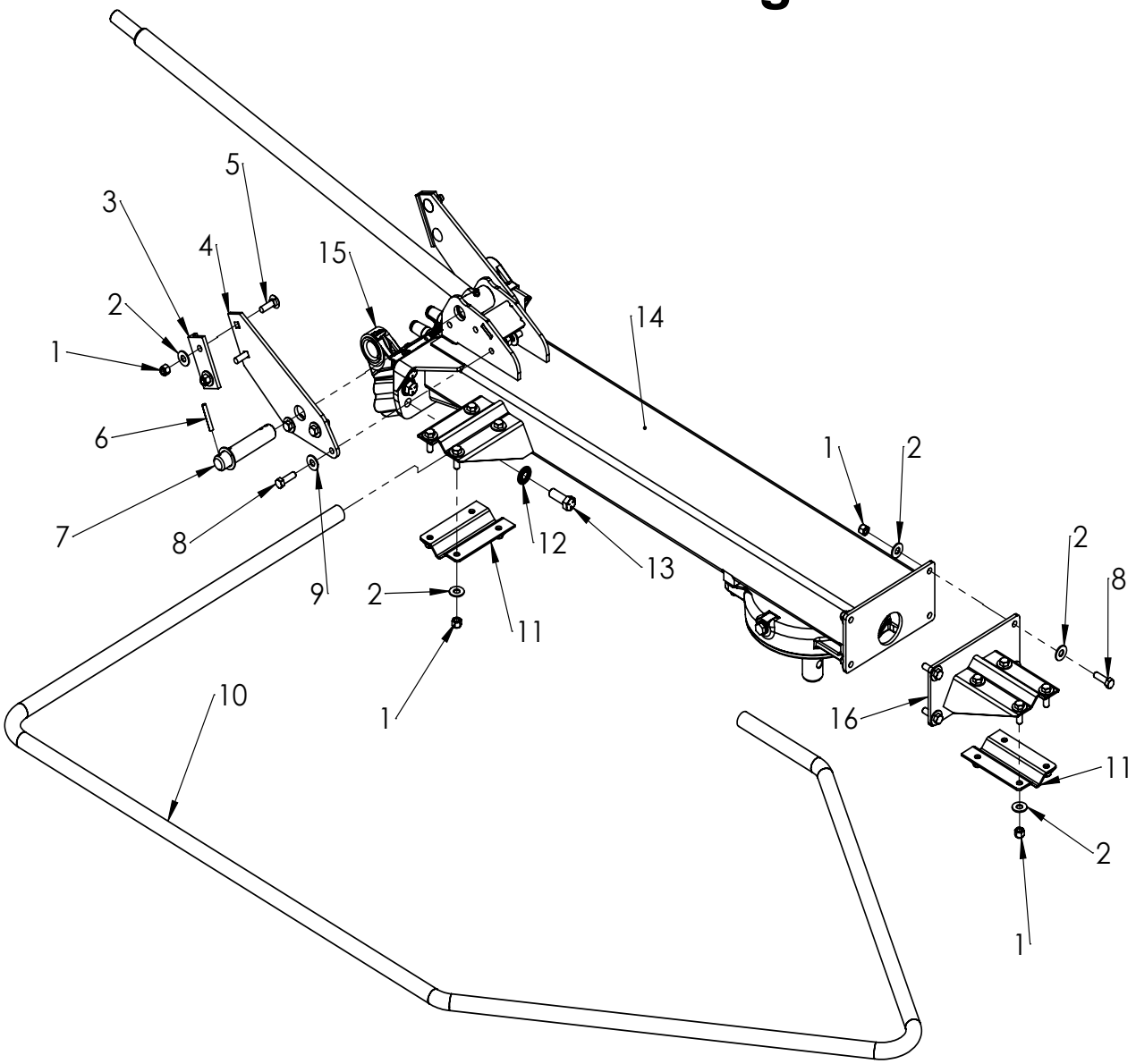

Ref#	Description	Part#
1	3/8-16 Nylon Lock Nut, Zinc	003000
2	3/8 USS Flat Washer, Zinc	001035
3	Bumper Angle	705103
4	Left Cylinder Bracket	705104
5	3/8-16 X 1-1/4" Carriage Bolt	000150
6	1/4 X 1-3/4" Roll Pin, Zinc	500187
7	Cylinder Pin, Inner	701016
8	3/8-16 X 1-1/4" Hex Head Bolt	000275

	Description	Part#
9	3/8 USS Flat Washer, Zinc	001035
10	Outer Guard	702693
11	Guard Cradle	702696
12	9/16" Serrated Conical Plated Washer	705000
13	9/16-12 X 1-1/2" Hex Head Bolt	000577
14	Left Wing Weldment 02 Series	704108
15	Pivot Casting (Machined)	703547
16	Guard Sleeve Weldment	702704

Right Middle Wing

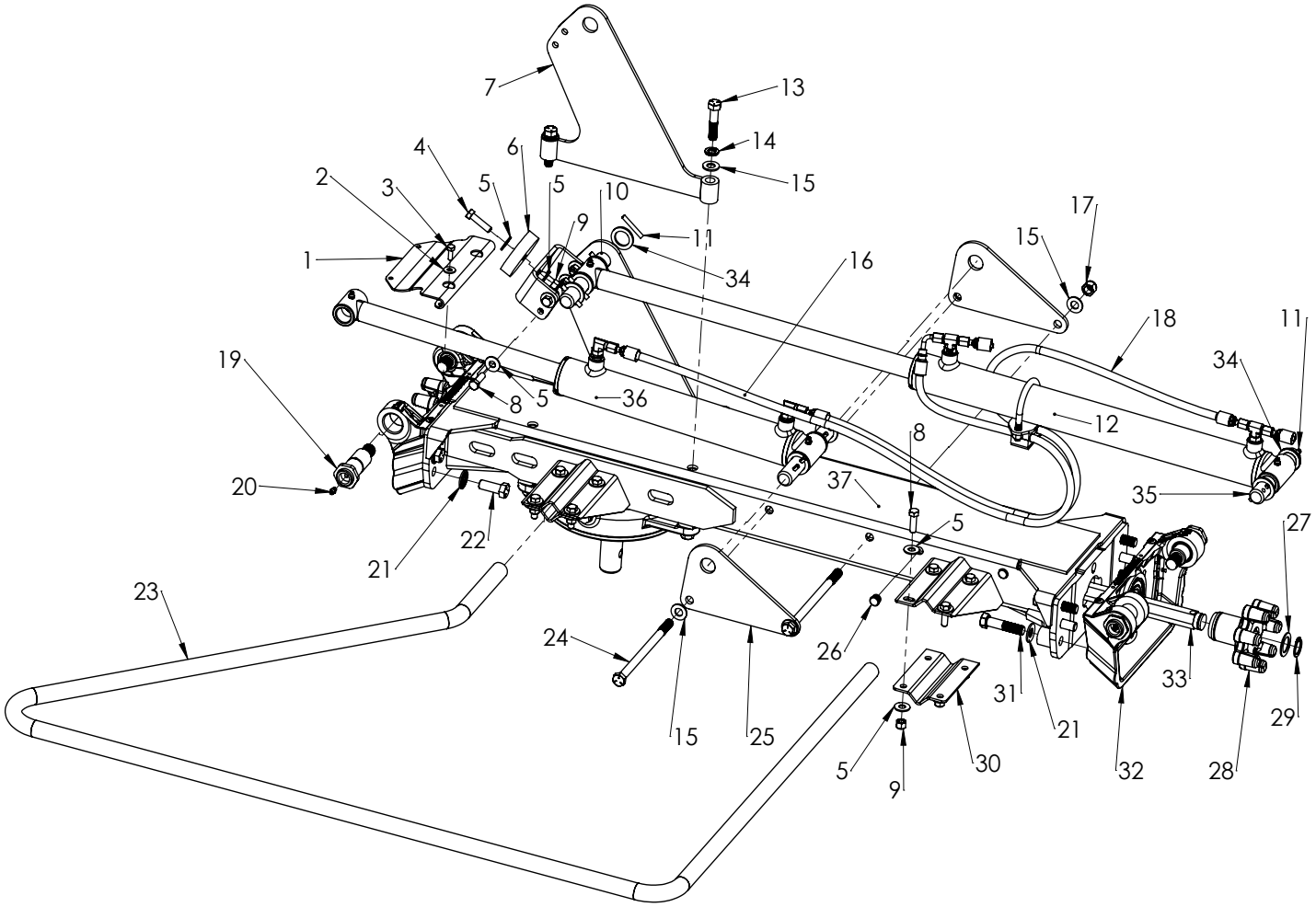

Ref#	Description	Part#
1	Casting Finger Cover	705026
2	1/4 USS Flat Washer, Zinc	001020
3	1/4-20 X 3/4 Hex Head Bolt. GR 5	000175
4	3/8-16 X 1 1/2 Hex Head Bolt	000280
5	3/8 USS Flat Washer, Zinc	001035
6	Wing Bumper	703324
7	Rod Side Cylinder Weldment	705101
8	3/8-16 X 1-1/4 Hex Head Bolt	000275
9	3/8-16 Nylon Lock Nut, Zinc	003000
10	Cylinder Pin	705110
11	1/4 X 1-3/4 Roll Pin, Zinc	500187
12	2" Bore X 20" Stroke Cylinder	705107
13	1/2-13 X 2-1/4 Hex Head Bolt	000455
14	1/2 Lock Washer, Zinc	000840
15	1/2 SAE Flat Washer, Zinc	001061
16	51" Hose #4 FJX90S x #4FJX (rod to rod)	705160
17	1/2" Nylon Lock Nut	000950
18	52" Hose #4FJX x #4FJX (Base to Base)	705162
19	Pivot Pin Weldment	705013

Ref#	Description	Part#
20	1/4-28 Special Taper Fitting	400117
21	9/16" Serrated Conical Plated	705000
22	9/16-12 x 1-1/2" Hex Head Bolt	000577
23	6100/8100 Middle Wing Guard	703263
24	1/2-13 x 8 Hex Head Bolt GR5	000553
25	Right Side Bread Plate	705132
26	CCF 5/8-14-20 Pipe Plug	706076
27	1 x 1-1/2" Machinery Bushing	001008
28	7 Finger Drive, Forged	703546
29	1" Heavy Duty Ext. Retaining Ring	702883
30	Guard Cradle	702696
31	9/16-12 x 2-1/2 Hex Head Bolt	000602
32	Pivot Casting	703547
33	6100 Middle Wing Hex Shaft	703051
34	1 x 1-1/2" Machinery Bushing	001006
35	Axle / Cylinder Pin	703252
36	2" Bore x 12" Stroke Cylinder	705131
37	Right Middle Weld 02 Series	704110

Right Outer Wing

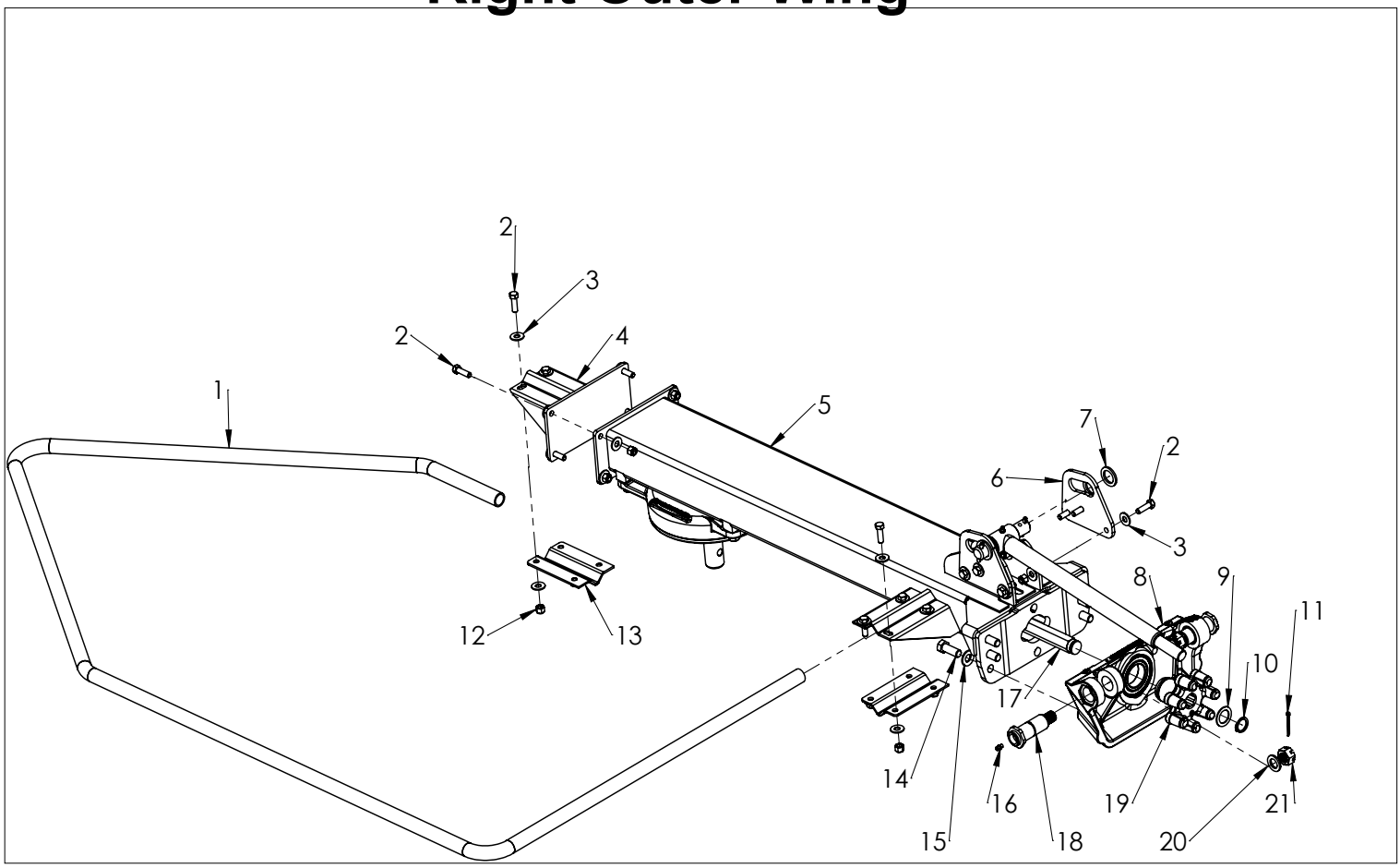

Ref#	Description	Part#
1	Outer Guard	702693
2	3/8-16 X 1-1/4" Hex Head Bolt	000275
3	3/8 USS Flat Washer, Zinc	001035
4	Guard Sleeve Weldment	702704
5	Right Wing Weldment 02 Series	704172
6	Bolt On Plate 02 Series	705105
7	1 X 1-1/2" Machinery Bushing	001006
8	Pivot Casting (Machined)	703547
9	1 X 1-1/2" Machinery Bushing	001008
10	1" Heavy Duty Retaining Ring	702883
11	5/32 X 1-1/2 Cotter Pin	001215
12	3/8-16 Nylon Lock Nut	003000

Ref#	Description	Part#
13	Guard Cradle	702696
14	9/16-12 X 1-1/2" Hex Head Bolt	000577
15	9/16" Serrated Conical Plated Washer	705000
16	1/4-28 Special Taper Fitting	400117
17	Hex Shaft, Wing	704057
18	Pivot Pin Weldment	705013
19	7 Finger Drive, Forged	703546
20	3/4 X 1-1/4" Machinery Bushing	400146
21	3/4-16 Castle Nut, Plated	705070

Torsion Axle Assembly

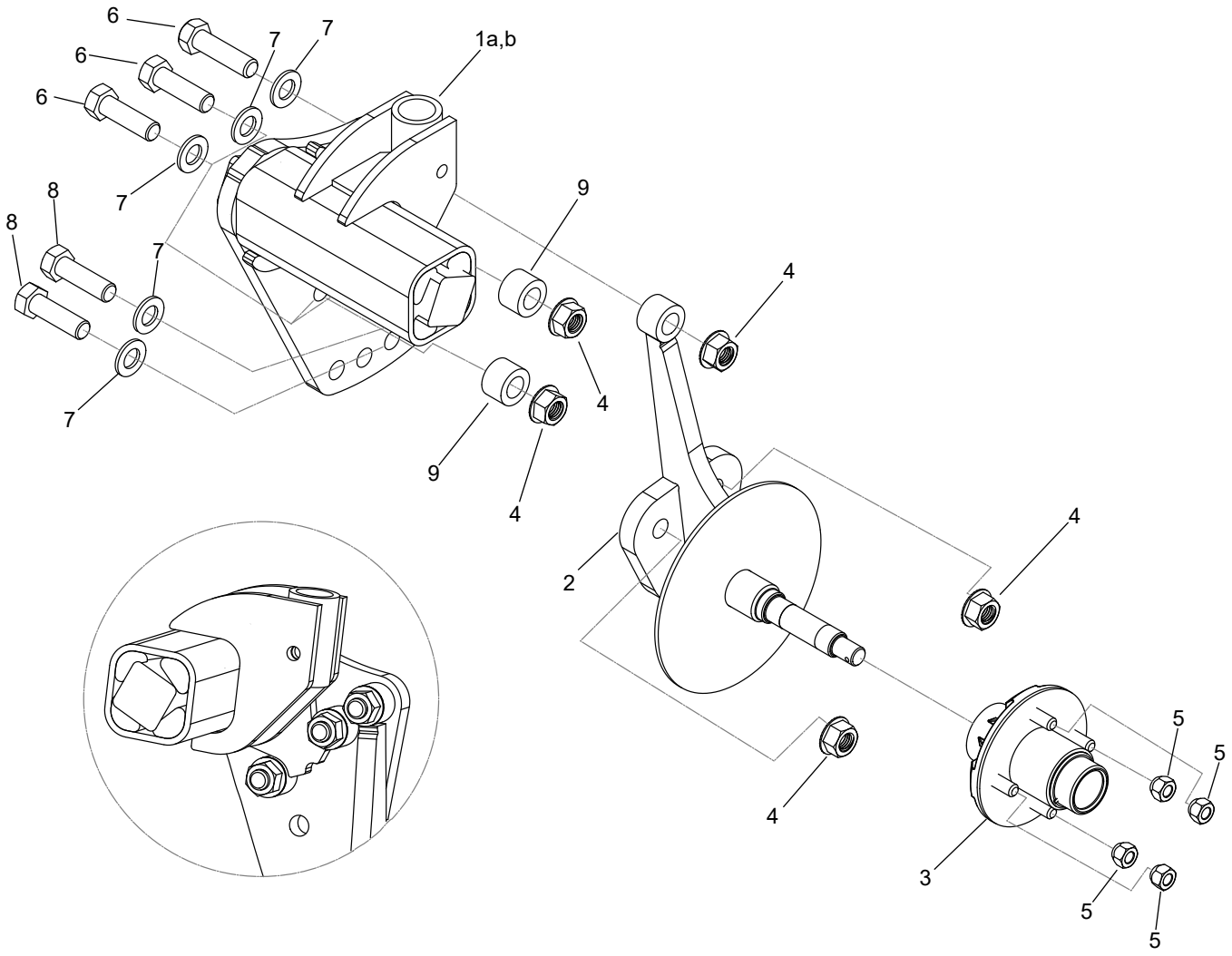

Ref#	Description	Part#
1a	Left 3.5 Torsion Assembly	703938
1b	Right 3.5 Torsion Assembly	703921
2	Torsion Spindle Weldment	703821
3	Complete Hub	501199
4	3/4"-10 Serrated Flange Nut	000977
5	1/2" Cone Wheel Nut	101458
6	3/4-10 x 2.75 HH Bolt Plain	000710
7	3/4 SAE Flat Washer	001086
8	3/4 - 10 x 2 1/2 HH Bolt	000720
9	Pitch Pivot Tube	703795

Outer Axle Assembly

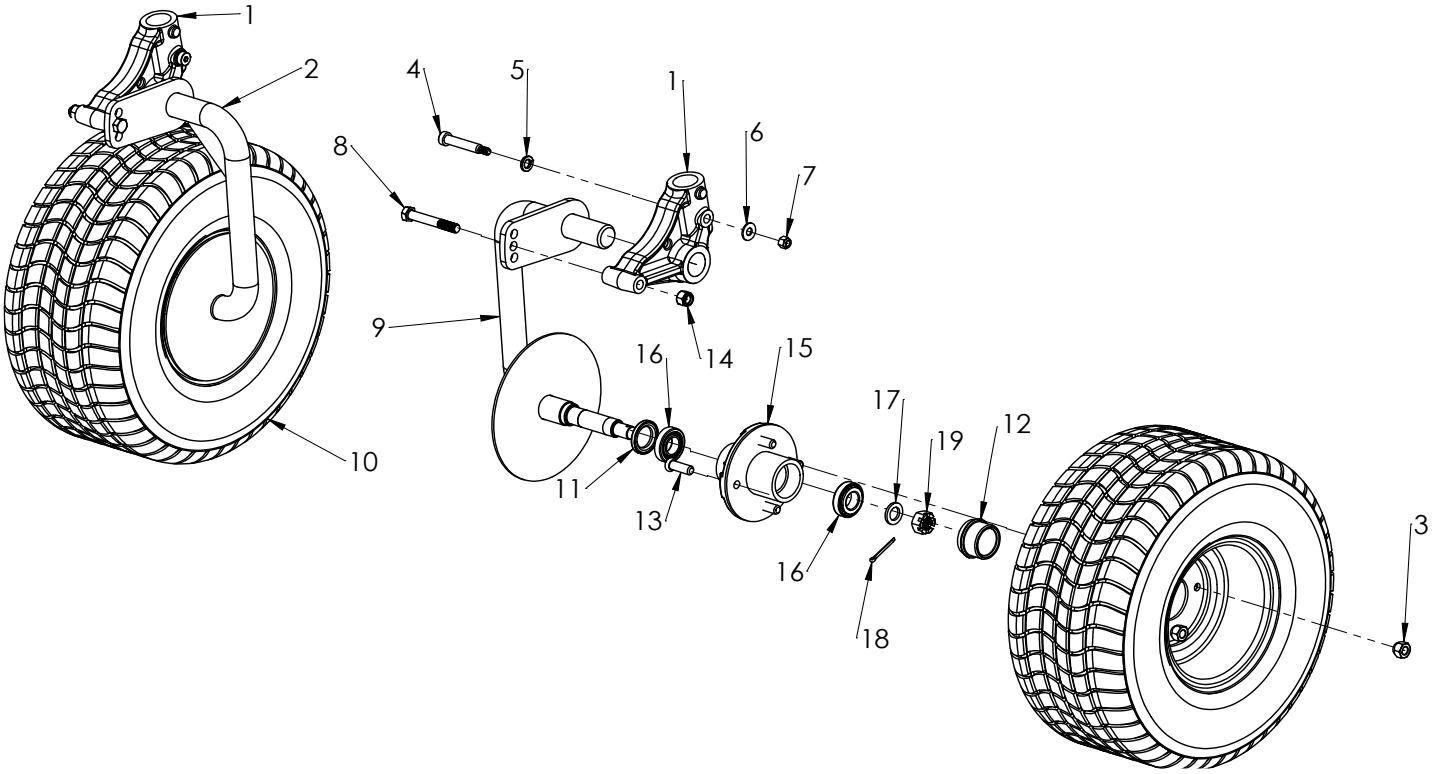

Ref#	Description	Part#
1	Spindle Boot Casting	705150
2	Spindle Weldment Assembly (RIGHT)	702825
3	1/2" Cone Wheel Nut	101458
4	1/2 x 2-1/2" Shoulder Bolt	703772
5	1/2" Lock Washer, Zinc	000840
6	3/8" USS Flat Washer, Zinc	001035
7	3/8-16 Nylon Lock Nut, Zinc	003000
8	1/2-13 x 3-1/2 HHB GR.5	000480
9	Spindle Weldment Assembly (LEFT)	702824
10	Tire and Wheel Assembly	500220
11	Grease Seal	500201
12	Hub Cap	500209

Ref#	Description	Part#
13	Hub Complete	500199
14	1/2" Nylon Locknut	000950
15	Hub Complete	G440RV
16	Bearing	L44643_610
17	3/4 x 1-1/4" Machinery Bushing	400146
18	5/32 X 1-1/2" Cotter Pin	001215
19	3/4-16 Castle Nut, Plated	705070

Input Gearbox Assembly

Part numbers with ** are not available to purchase individually. You will need to buy the whole gearbox to obtain these parts

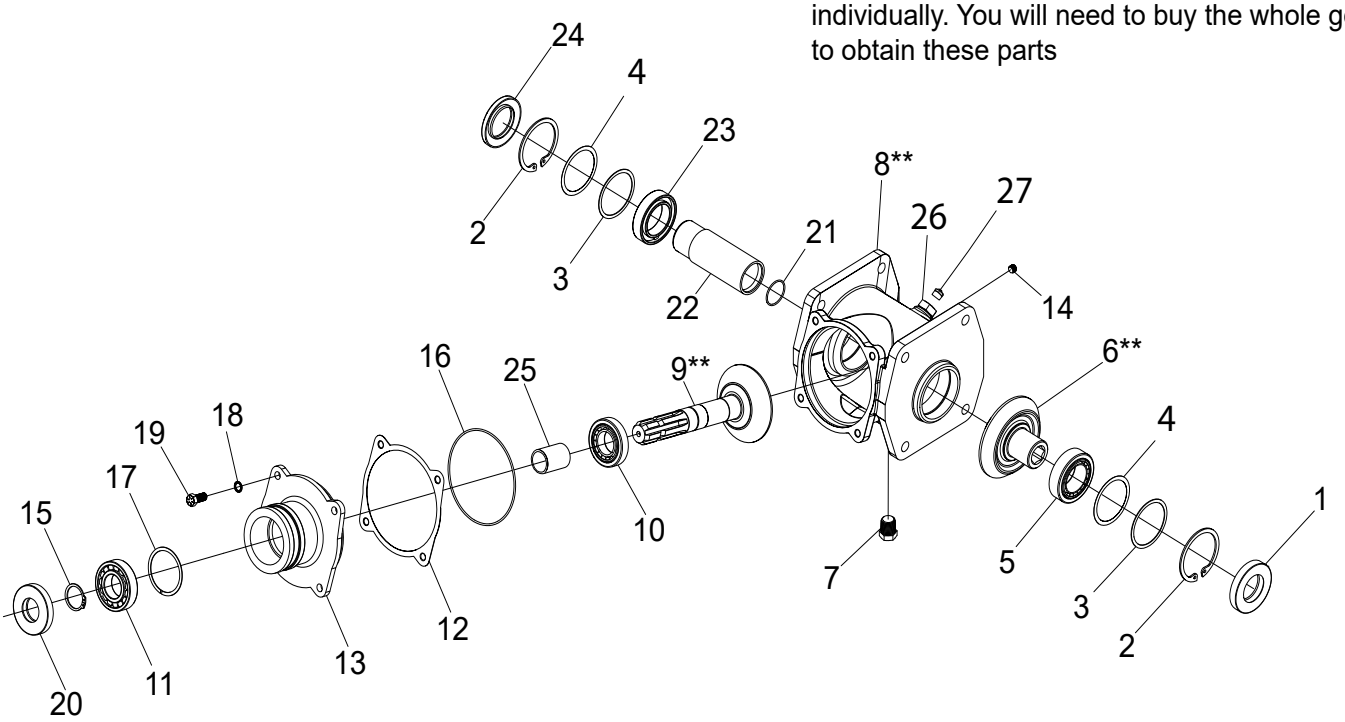

Ref#	Description	Part#
1	Oil Seal,- 45Mm X 80Mm X 13Mm	702655
2	Int. Retaining Ring, 80Mm, Din 472-080	702643
3	Input Gear 20 Gauge Shim	702661-36
4	Center Gear Shim 0.003" Thick	702661-003
5	33109 Taper Bearing Set	702841
6	20T High Speed Center Gear,-(Hex Drive)	703573
7	X100 Series Plug	703115
8	Center Gearbox 17X20 Housing	703560
9	17T High Speed Pinion	703572
10	30207 Tapered Roller Bearing	703564
11	6207 Open Ball Bearing	702644
12a	Input Shaft Housing 0.030” Shim	702645-030
12b	Input Shaft Housing 0.036” Shim	702645-036
12c	Input Shaft Housing 0.024” Shim	702645-024

Ref#	Description	Part#
13	Input Shaft Housing For Tapered Roller Bearing	703563
14	1/8 NPT Pipe Plug	502298
15	Ext. Retaining Ring, 35Mm	702648
16	Input Cap O-Ring	703659
17	Wave Spring	703825
18	7/16 Serrated Safety Washer, 0130155	702663
19	7/16-20 X 1 Hex Head Bolt Gr. 8	000349
20	Oil Seal,- 35Mm X 72Mm X 12Mm	702656
21	O-Ring	702646
22	Input Gear Spacer For 17X20 Gearbox	703570
23	6010 Open Ball Bearing	702638
24	Oil Seal,- 50Mm X 80Mm X 8Mm	702654
25	Pinion Bearing Sacer	703885
26	Pipe Adaptor 5406-08-02	705088
27	Alemite 47200 Pressure Relief Fitting	705089
	Complete High Speed Center Gearbox	703621

Rotor Gearbox Assembly

* Crosshole in Spindle Assembly (ID 16) was changed from 0.472” to 0.500” starting at serial number 95002.

Part numbers with ** are not available to purchase individually. You will need to buy the whole gearbox to obtain these parts

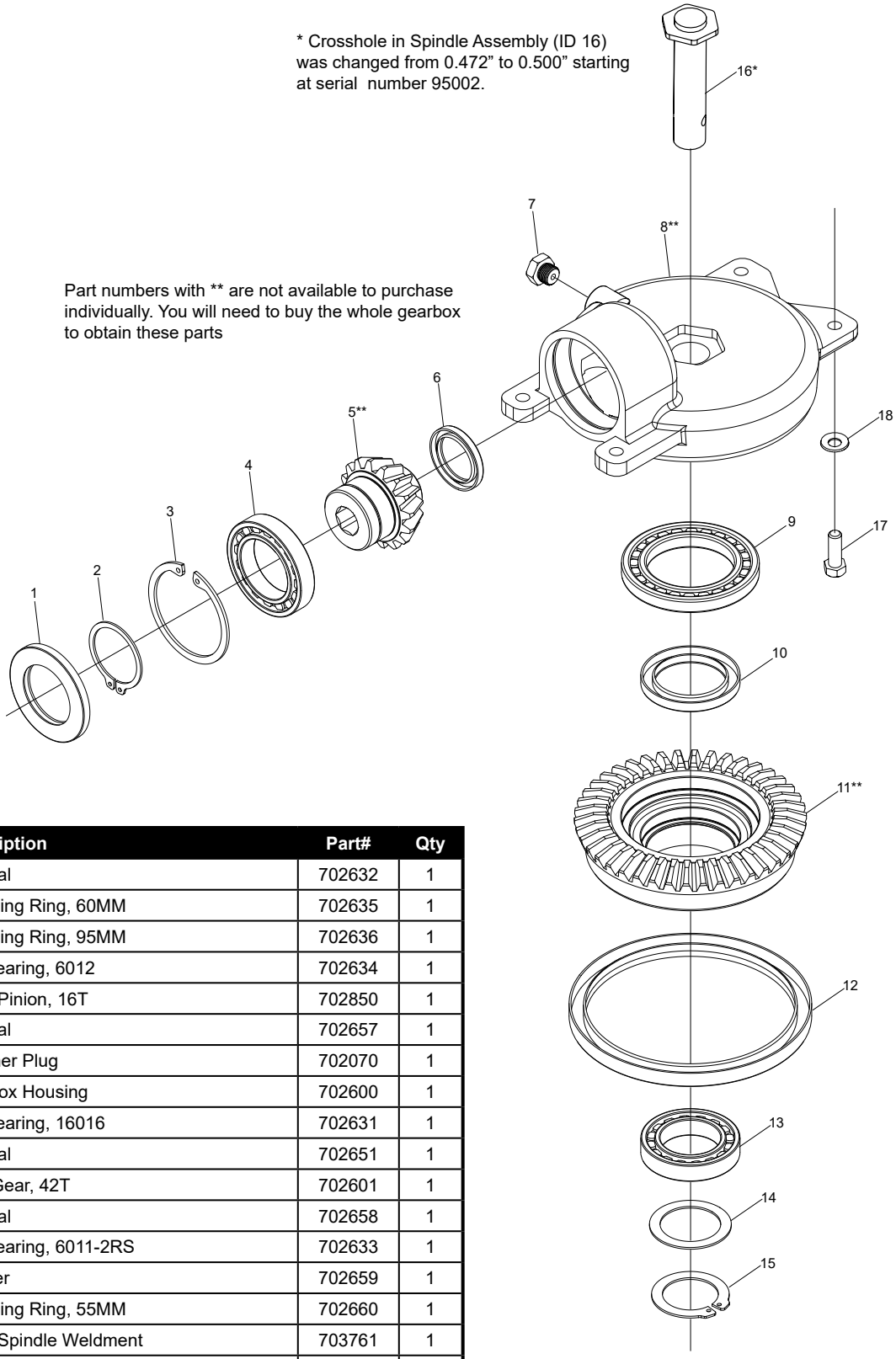

Ref#	Description	Part#	Qty
1	Oil Seal	702632	1
2	Retaining Ring, 60MM	702635	1
3	Retaining Ring, 95MM	702636	1
4	Ball Bearing, 6012	702634	1
5	Rotor Pinion, 16T	702850	1
6	Oil Seal	702657	1
7	Breather Plug	702070	1
8	Gearbox Housing	702600	1
9	Ball Bearing, 16016	702631	1
10	Oil Seal	702651	1
11	Ring Gear, 42T	702601	1
12	Oil Seal	702658	1
13	Ball Bearing, 6011-2RS	702633	1
14	Washer	702659	1
15	Retaining Ring, 55MM	702660	1
16	Rotor Spindle Weldment	703761	1
	Complete Rotor Gearbox CCW 7 arm	704002	3
	Complete Rotor Gearbox CW 7 arm	704019	3

Tine & Tine Arm Assembly

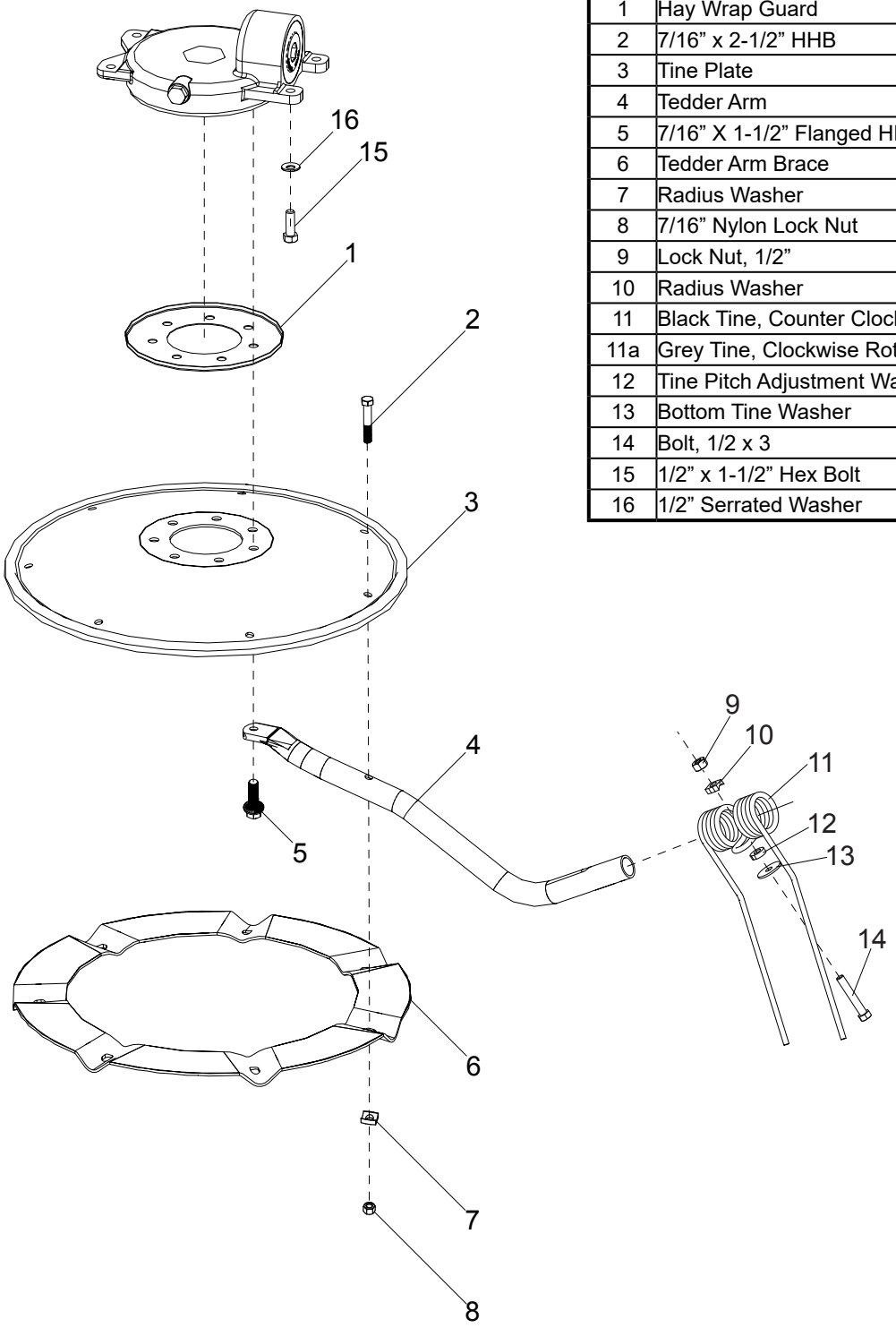

Ref#	Description	Part#	Qty (per rotor)
1	Hay Wrap Guard	702734	1
2	7/16” x 2-1/2” HHB	000375	7
3	Tine Plate	702714	1
4	Tedder Arm	702718	7
5	7/16” X 1-1/2” Flanged HHB	000725	7
6	Tedder Arm Brace	700942	1
7	Radius Washer	701008	7
8	7/16” Nylon Lock Nut	000385	7
9	Lock Nut, 1/2”	000950	7
10	Radius Washer	701008	7
11	Black Tine, Counter Clockwise	700901	7
11a	Grey Tine, Clockwise Rotation	700929	7
12	Tine Pitch Adjustment Washer	701005	7
13	Bottom Tine Washer	701004	7
14	Bolt, 1/2 x 3	000471	7
15	1/2” x 1-1/2” Hex Bolt	000435	4
16	1/2” Serrated Washer	702821	4

Hydraulics

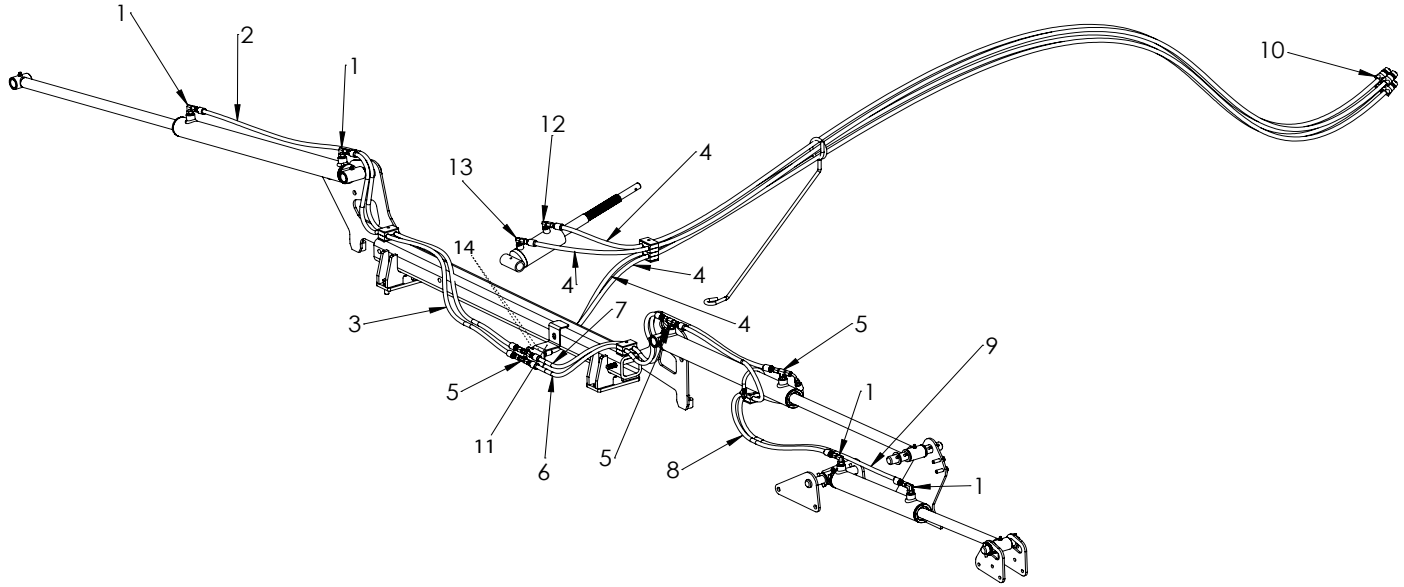

Ref#	Description	Part#
1	#4 JIC x #6 Male Boss 90 deg. Elbow Fitting (6801, #4MJ x #6MB)	700907
2	79" Left Cylinder Rod Hose (#4 FJX x #4JK)	705163
3	50" Left Cylinder Base Hose (#4 FJX x #4JK)	705164
4	118" Tractor Hose (#4 FJX x #8MP)	701039
5	Tee- 1/4" Male JIC 37 Deg. Flare x 1/4" Male JIC Flare x 3/8 in Male O-ring Boss (6803-04-04-06)	706066
6	32" Right Cylinder Base Hose (#4 FJX x #4JK)	705161
7	53" Right Cylinder Rod Hose (#4 FJX x #4JK)	705159
8	52" Right Base to Base Hose (#4 FJX x #4JK)	705162
9	51" Right Rod to Rod Hose (#4 FJX90S x #4 FJX)	705160
10	1/2" Male AG Coupler	290105
11	Hydraulic Hose Bracket	706041
12	orfice fitting 0.031" #4 JIC x #4 Male Boss 90 deg. Elbow Fitting (6801, #4MJ x #6MB)	706040
13	#4 JIC x #4 Male Boss 90 deg. Elbow Fitting (6801, #4MJ x #6MB)	700948
14	RST2406-04-04-R.062 Fitting (Short Straight Orfice Fitting at front of T)	706075