PEQUEA

Tradition In Progress ®

HRS15 Rotary Rake

Serial Numbers 97279-99047

Illustrated Parts Breakdown

Page 1	Tongue Assembly
Page 2	Guards and Guard Arms
Page 3	Hay Curtain Mount
Page 4	Hay Curtain
Page 5	Rear End Assembly
Page 6	Axle and Walking Beam
Page 7	Tine Arm & Tine
Page 8	Rotary Gearbox
Page 9	Hydraulics
Page 10	Decals

09/18/2020

Tongue Assembly

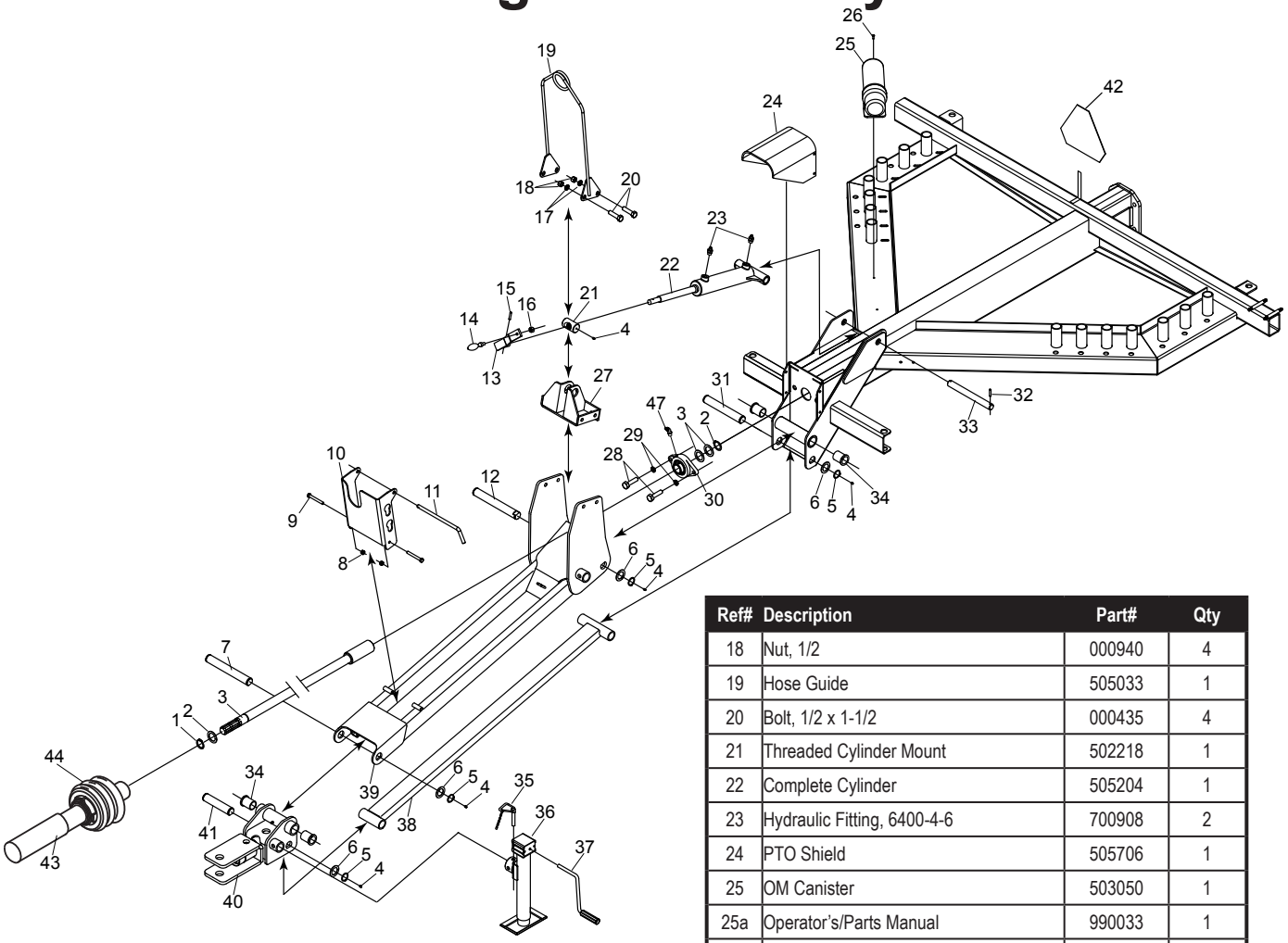

Ref#	Description	Part#	Qty
1	Retaining Ring, 1-3/8	505570	2
2	Machinery Bushing, 1-3/8	001505	3
3	Drive Shaft	505516	1
4	Grease Fitting	400117	5
5	Retaining Ring, 1-1/4	701173	4
6	Machinery Bushing, 1-1/4	500185	4
7	Pivot Shaft	505683	1
8	Nylon Locknut, 3/8	003000	2
9	Bolt, 3/8 x 2-1/2	000300	2
10	PTO Stand	505241	1
11	Hitch Pin	505707	1
12	Pivot Shaft	505687	1
13	Front Cylinder Handle	503037	1
14	Handle	502149	1
15	Roll Pin	500187	1
16	Nylon Jam Nut, 3/8	000920	1
17	Lock Washer, 1/2	000840	4

Ref#	Description	Part#	Qty
18	Nut, 1/2	000940	4
19	Hose Guide	505033	1
20	Bolt, 1/2 x 1-1/2	000435	4
21	Threaded Cylinder Mount	502218	1
22	Complete Cylinder	505204	1
23	Hydraulic Fitting, 6400-4-6	700908	2
24	PTO Shield	505706	1
25	OM Canister	503050	1
25a	Operator's/Parts Manual	990033	1
26	Screw	000115	1
27	Trunnion Pivot	505212	1
28	Bolt, 1/2 x 1-1/2	000435	2
29	Lock Washer, 1/2	000840	2
30	Flange Bearing	505568	1
31	Pivot Shaft	505686	1
32	Roll Pin	500187	2
33	Pivot Shaft	505342	1
34	Bronze Bushing	505099	4
35	Pin and Chain	500012	1
36	Complete Jack	903317	1
37	Jack Handle	903318	1
38	Hitch Linkage	505102	1
39	Tongue	505098	1
40	Swivel Hitch	505468	1
41	Pivot Shaft	505684	1
42	SMV Triangle	507166	1
43	Complete PTO Shaft	505701	1
44	PTO Shield Kit, Bondioli Shaft	505797	1
45	45° Grease Fitting	701171	1

Guards and Guard Arms

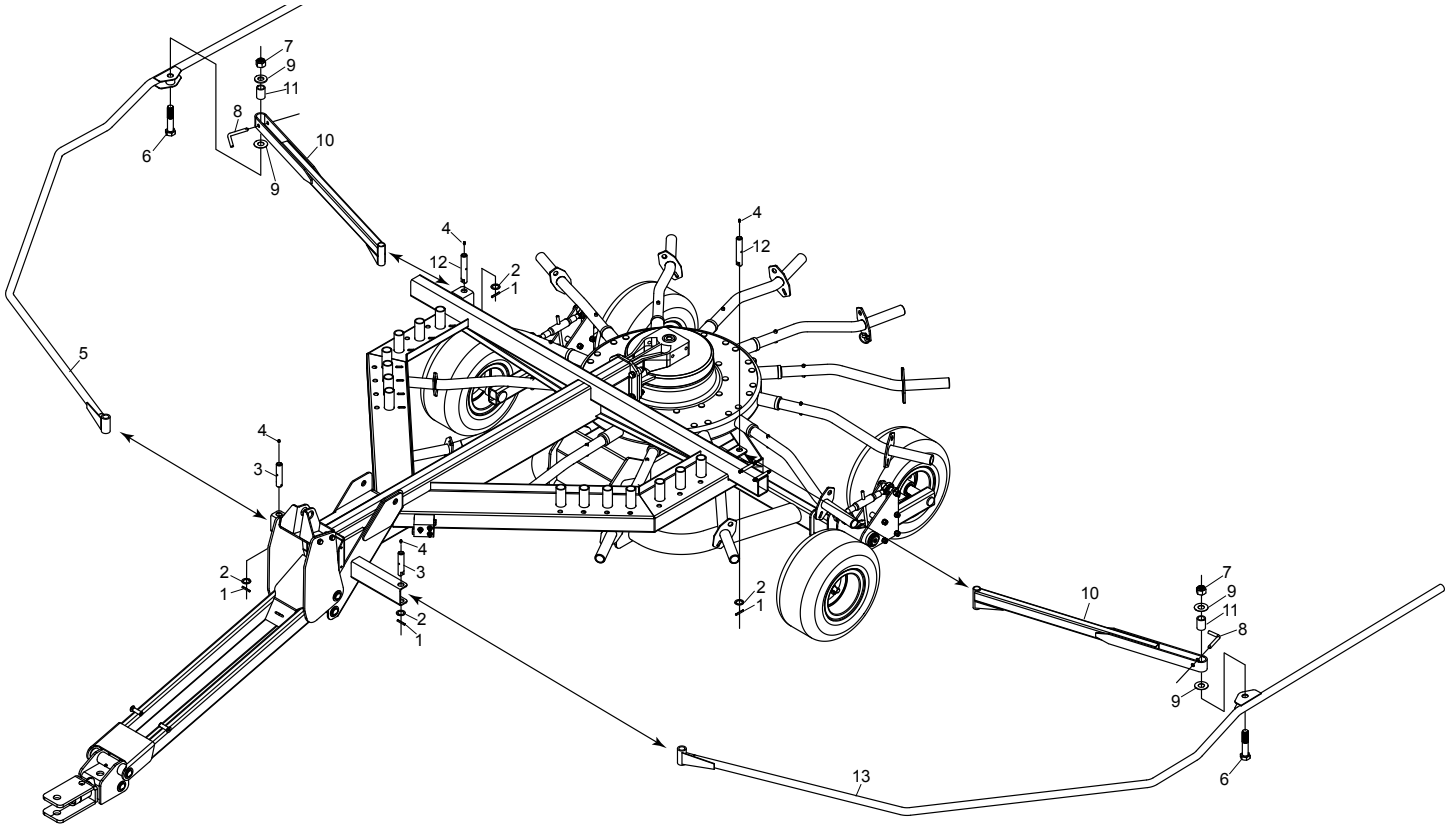

Ref#	Description	Part#	Qty
1	Roll Pin, 1/4 x 1-3/4	500187	4
2	Machinery Bushing, 1”	001008	4
3	Guard Pin	505651	2
4	Grease Fitting	400117	4
5	Guard, Right	505639	1
6	Bolt, 1” x 5”	000785	2
7	Nylon Locknut, 1”	001012	2
8	Pin	100330	2
9	Washer	001094	4
10	Guard Arm	505678	2
11	Pivot Bushing	505638	2
12	Guard Pin	505647	2
13	Guard, Left	505626	1

Hay Curtain Mount

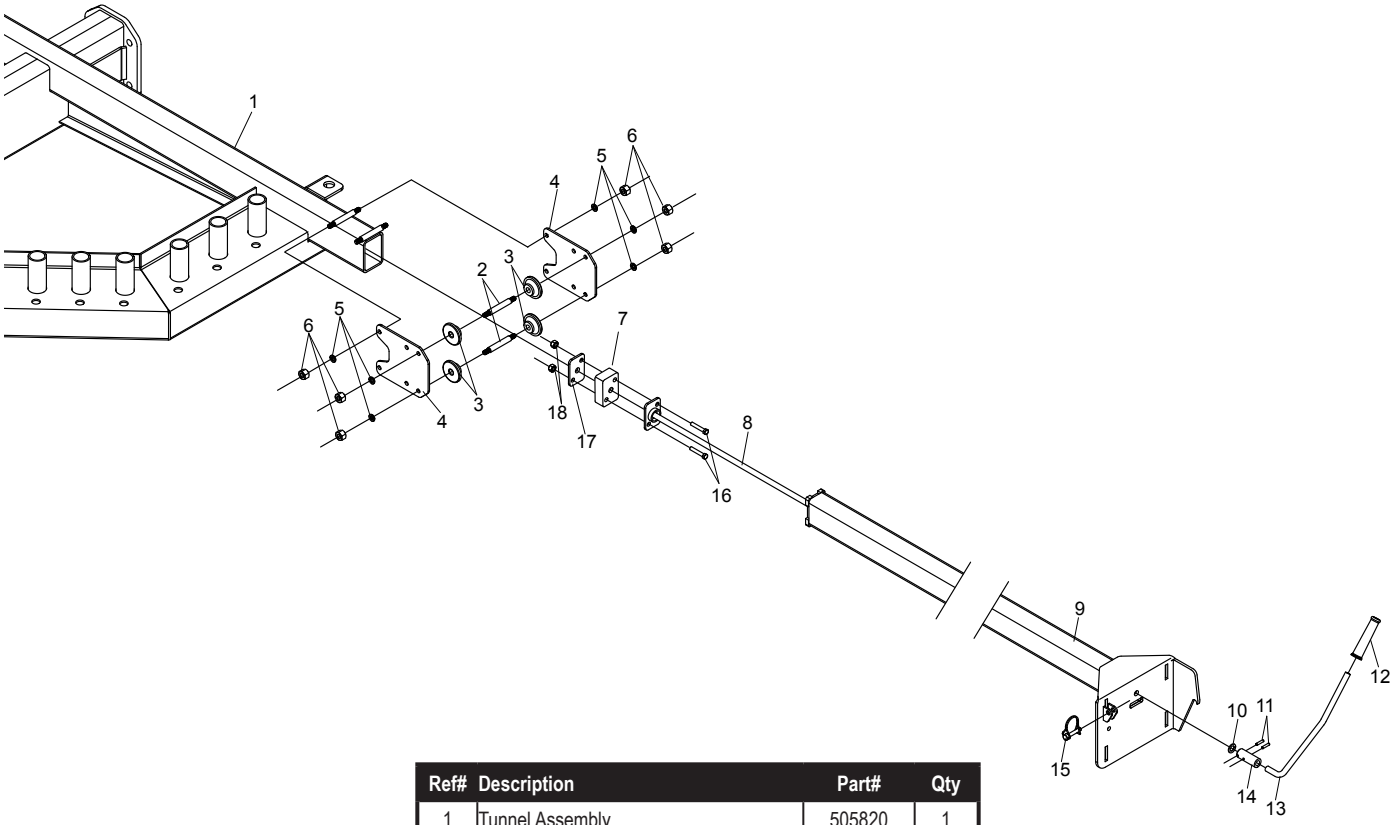

Ref#	Description	Part#	Qty
1	Tunnel Assembly	505820	1
2	Roller Stud	505681	2
3	Plastic Bearing	505605	4
4	Guide Plate S/N 90656+	505607	2
4	Guide Plate S/N -90656	505676	2
5	Lock Washer, 3/8”	000820	12
6	Nut, 3/8”	000915	12
7	Rubber Block	505441	1
8	Torsion Bar	505437	1
9	Curtain Bar	505439	1
10	Machinery Bushing, 1/2”	000530	1
11	Roll Pin, Stainless Steel	505691	2
12	Handle Grip	505052	1
13	Handle	505050	1
14	Curtain Handle Coupler	505053	1
15	Quick Pin	903144	1
16	Bolt, 3/8 x 2	000286	2
17	Rubber Hold Plate	505442	1

Hay Curtain

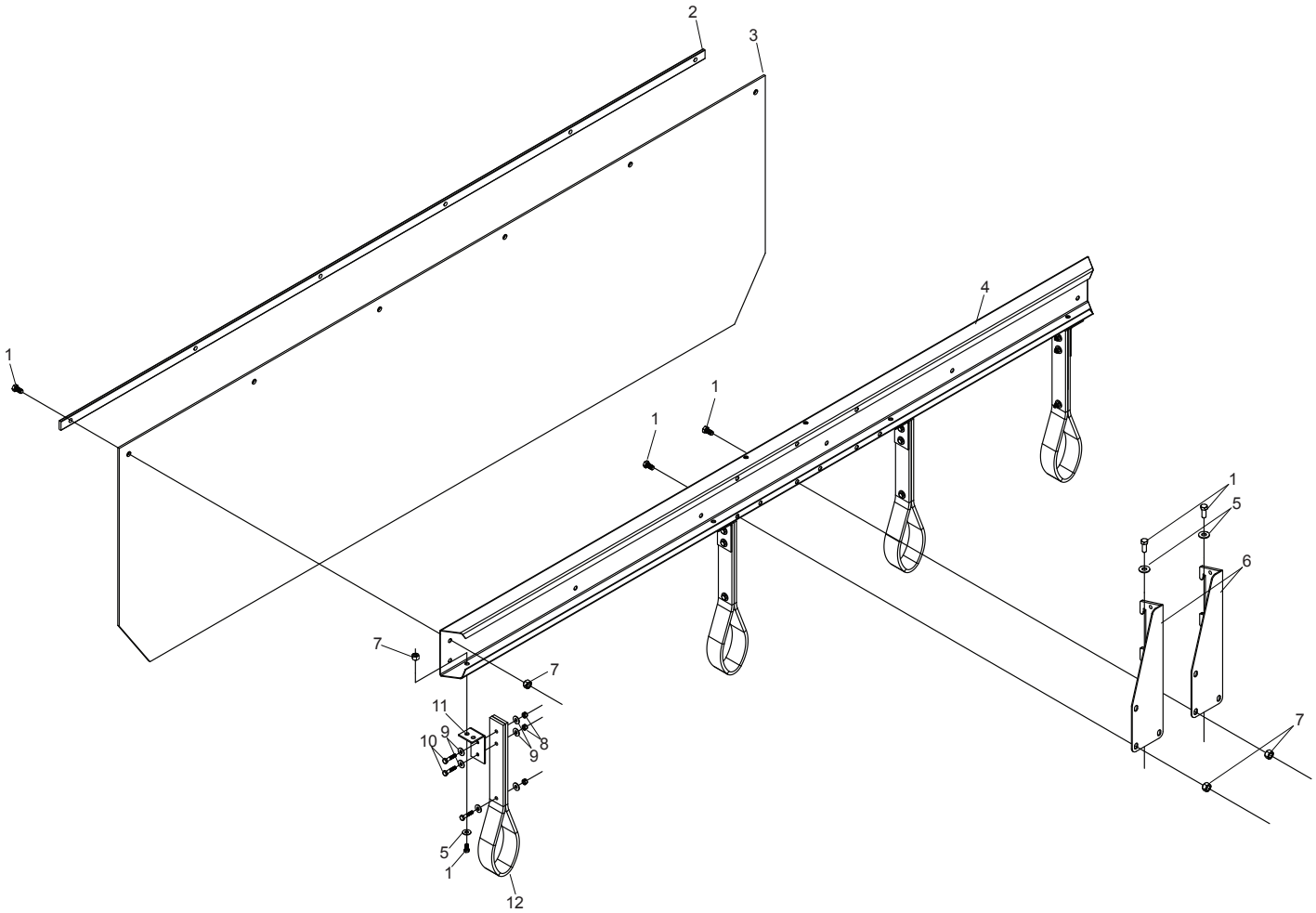

Ref#	Description	Part#	Qty
1	Bolt, 3/8 x 1	000270	20
2	Curtain Clamp	505713	1
3	Hay Curtain	505044	1
4	Curtain Bracket	505520	1
5	Flat Washer, 3/8	001035	8
6	Curtain Mount	505529	2
7	Nylon Locknut, 3/8	003000	20
8	Nylon Locknut, 1/4	003001	12
9	Flat Washer, 1/4	001020	16
10	Bolt, 1/4 x 1	100148	12
11	Mounting Plate	505738	4
12	Curtain Support	505737	4

Rear End Assembly

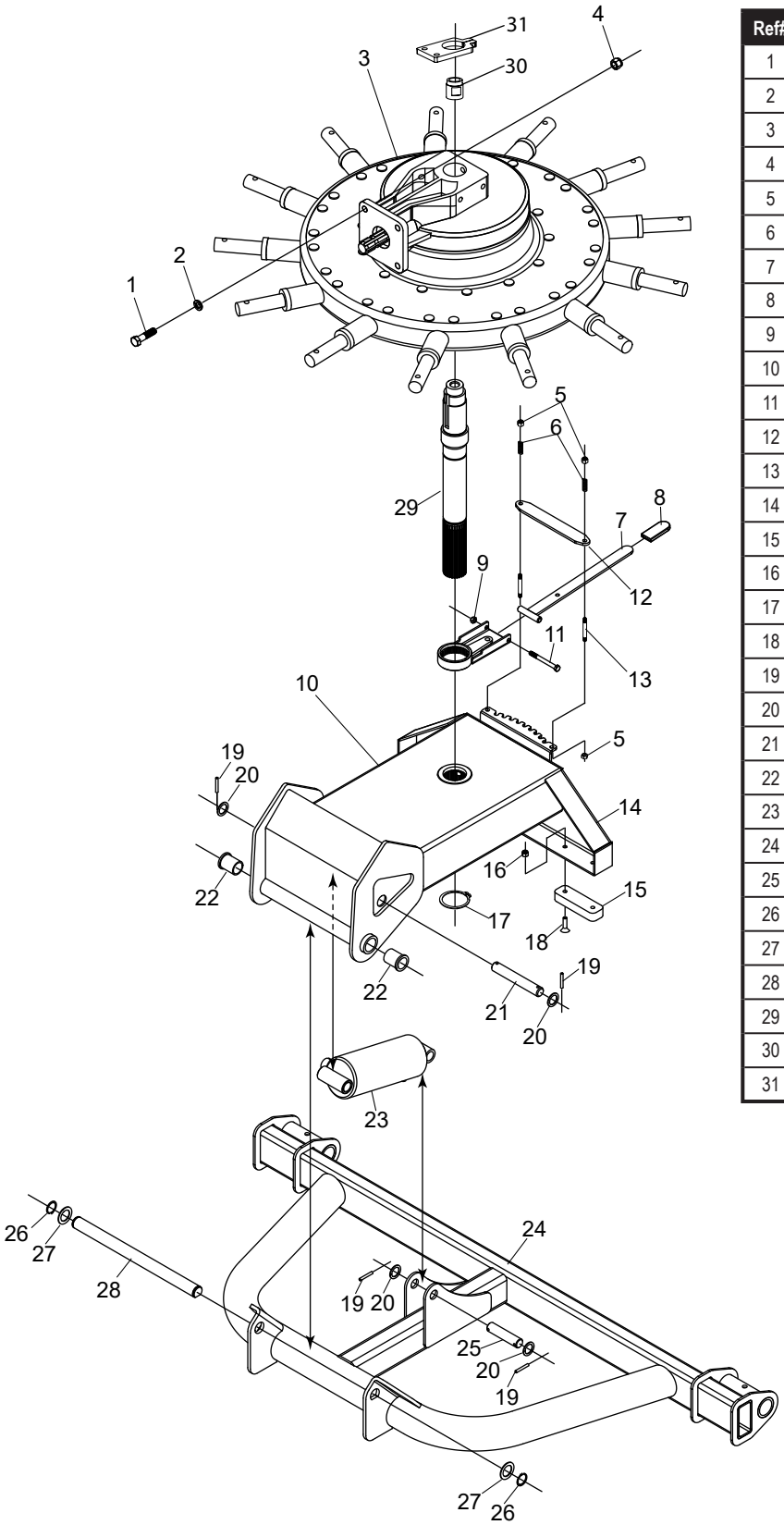

Ref#	Description	Part#	Qty
1	Bolt, 5/8 x 2-1/2	000620	4
2	Lock Washer, 5/8	000860	4
3	Gearbox, Complete	505002	1
4	Nylon Locknut, 5/8	000972	4
5	Nylon Locknut, 3/8	003000	4
6	Spring	505734	2
7	Pitch Handle	505566	1
8	Handle Grip	401289	1
9	Steel Locknut, 3/8	900134	1
10	Front Gearbox Base Weldment	505821	1
11	Bolt, 3/8 x 3-3/4	000310	1
12	Pitch Spring Plate	505562	1
13	Threaded Stud	505681	2
14	Gearbox Base	505603	1
15	Rubber Bumper	505269	2
16	Nylon Locknut, 3/8	003000	4
17	Retaining Ring	502073	1
18	Bolt, 3/8 x 1-3/4 Socket Head	900129	4
19	Roll Pin, 1/4 x 1-3/4	500187	4
20	Machinery Bushing, 1”	001008	4
21	Cylinder Pin	505184	1
22	Bronze Bushing	505099	2
23	Rear Cylinder	505167	1
24	Axle	505014	1
25	Cylinder Pin	508186	1
26	Retaining Ring	701173	2
27	Machinery Bushing, 1-1/4”	500185	2
28	Pivot Shaft	505654	1
29	Gearbox Center Shaft	502054	1
30			1
31			1

Axle and Walking Beam

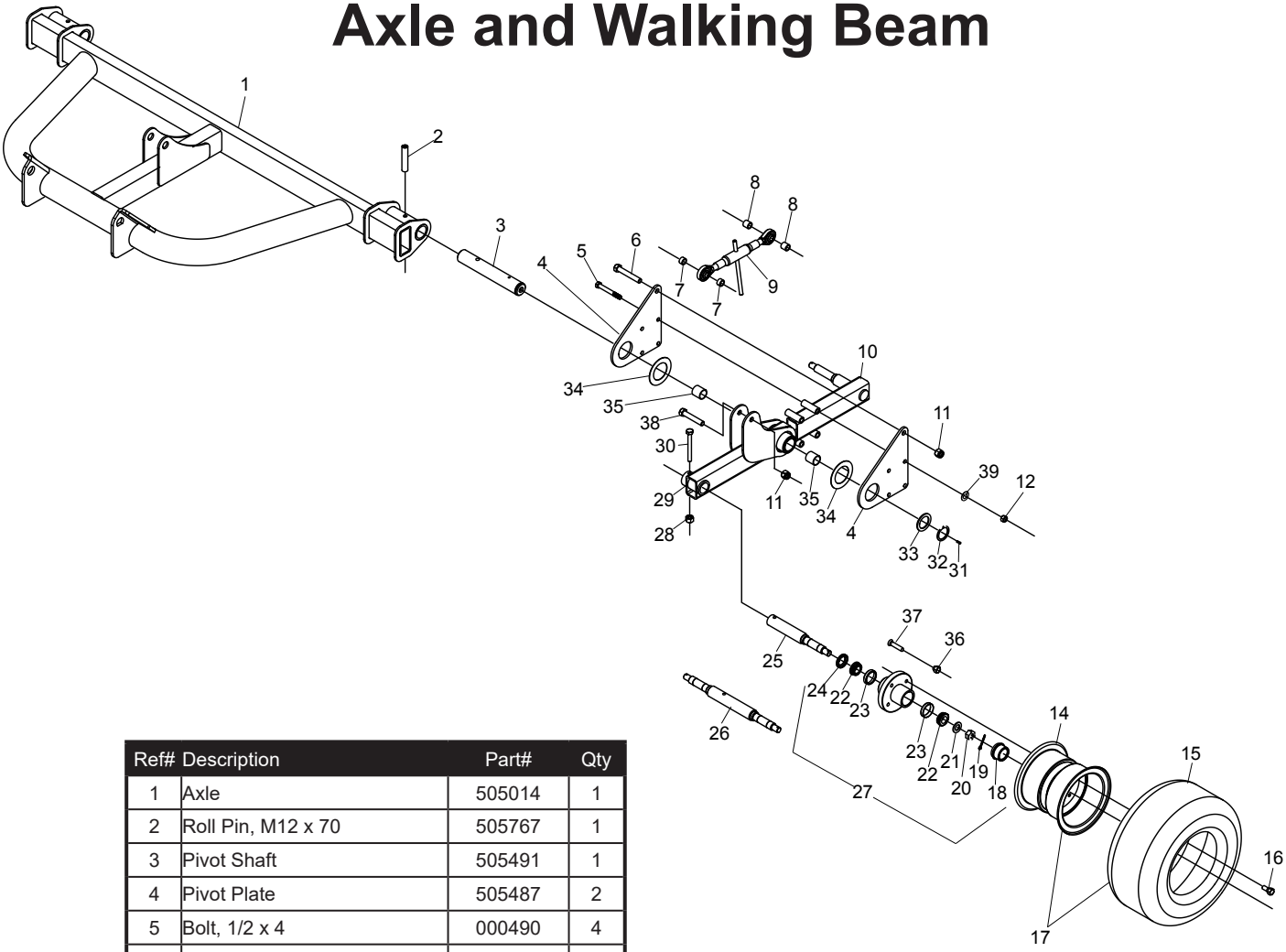

Ref#	Description	Part#	Qty
1	Axle	505014	1
2	Roll Pin, M12 x 70	505767	1
3	Pivot Shaft	505491	1
4	Pivot Plate	505487	2
5	Bolt, 1/2 x 4	000490	4
6	Bolt, 5/8 x 4-1/2	000645	1
7	Spacer	505671	2
8	Spacer	505495	2
9	Turn Buckle	505259	1
10	Walking Beam, Rear	505494	1
11	Nylon Locknut, 5/8	000972	2
12	1/2” Hex Nut	000940	4
14	Rim	500222	2
15	Tire	500221	2
16	Lug Bolt	500210	8
17	Tire & Wheel	500220	2
18	Cap	500209	2
19	Cotter Pin	500208	2
20	Spindle Nut	500207	2
21	Spindle Washer	500206	2
22	Bearing	500202	4
23	Race	500204	4
24	Seal	500201	2

NOTE: Quantities listed are for left side only

Quantities may change if extra tire option is installed

Ref#	Description	Part#	Qty
25	Spindle	505534	1
26	Double Spindle	505114	1
27	Hub Complete	500199	2
28	Nylon Locknut, 3/8	003000	2
29	Front Walking Beam, Left	505532	1
29a	Front Walking Beam, Right	505480	
30	Bolt, 3/8 x 2-1/2	000300	2
31	Grease Fitting	400117	1
32	Retaining Ring	505492	1
33	Machinery Bushing	500191	1
34	Pivot Washer	505489	2
35	Bronze Bushing	300012	2
36	Lug Nut	508506	8
37	Wheel Stud	508505	8
38	Bolt, 5/8 x 3-1/2	000627	1
39	1/2” Lock Washer	000840	1

Tine Arm and Tine

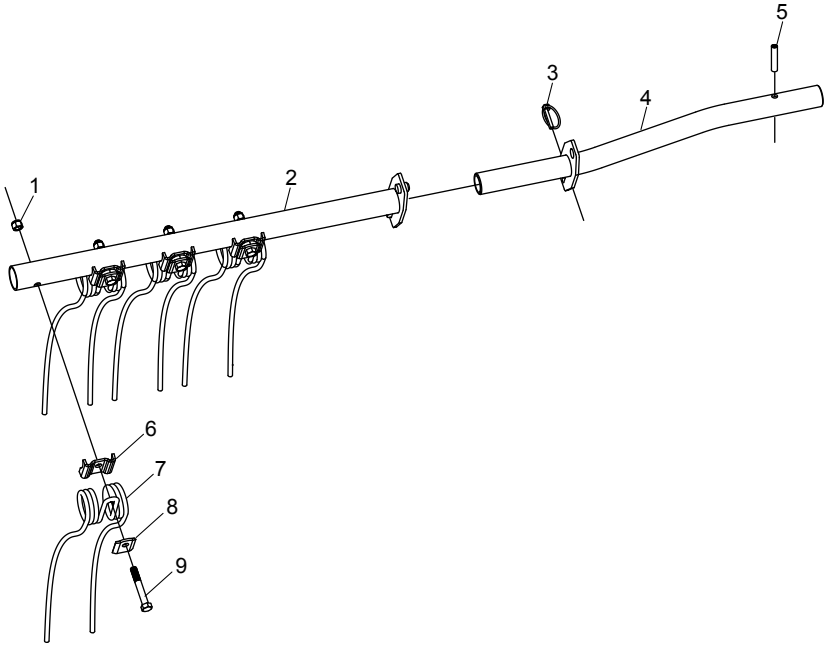

Ref#	Description	Part#	Qty
1	Locknut, 1/2	000950	52
2	Tine Arm	505407	13
3	Lynch Pin	500219	13
4	Stub Arm	505810	13
5	Roll Pin	702019	13
6	Tine Clip	500318	52
7	Tine	500218	52
8	Tine Clip	500319	52
9	Bolt, 1/2 x 3-1/2 GR8	000482	52

Rotary Gearbox

Ref#	Description	Part#	Qty
1	Oil Seal	502064	1
2	Nut	502066	1
3	Bearing	502063	2
4	Snap Ring	502062	2
5	Shim	502068	A/R
6	Shim	502059	A/R
7	Shim	502058	A/R
8	Pinion Shaft	502057	1
9	Grease Fitting	502061	2
10	Locking nut	502137	2
11	Nut Retainer	502138	2
14	Gearbox Cover	502045	1
15	Crown Wheel	502046	1
16	Cover	502047	1
17	Top Cover	502089	1
18	Snap Ring	502050	1
19	Shim	502056	A/R
20	Bearing	502051	2
21	Flange	502049	1
22	Gearbox Center Shaft	502054	1
23	Snap Ring	502073	2
24	Shim	502080	A/R
25	Cam Center	502075	1
26	Bottom Cover	502074	1
27	Spacer	502076	1
28	Cover	502077	1
29	Shim	502082	A/R
30	Bearing	502078	1
31	Snap Ring	502069	1
32	Lever	502079	1
33	Snap Ring	502081	1
34	Shim	502080	A/R
35	Bolt	502083	4
36	Locknut, M12	002876	39
37	Washer	502052	39
38	Screw	000117	13
39	Plastic Cap	502072	13
40	O-Ring Bushing	502093	26
41	O-Ring	502084	26
42	Plastic Hub	502088	26
43	Connecting Rod Support	502071	13
44	Connecting Rod	502087	13
45	Bearing	502091	13
46	Snap Ring	502086	13
47	Paralell Key	502053	1
48	Bolt	502065	39
49	Bolt	502048	8

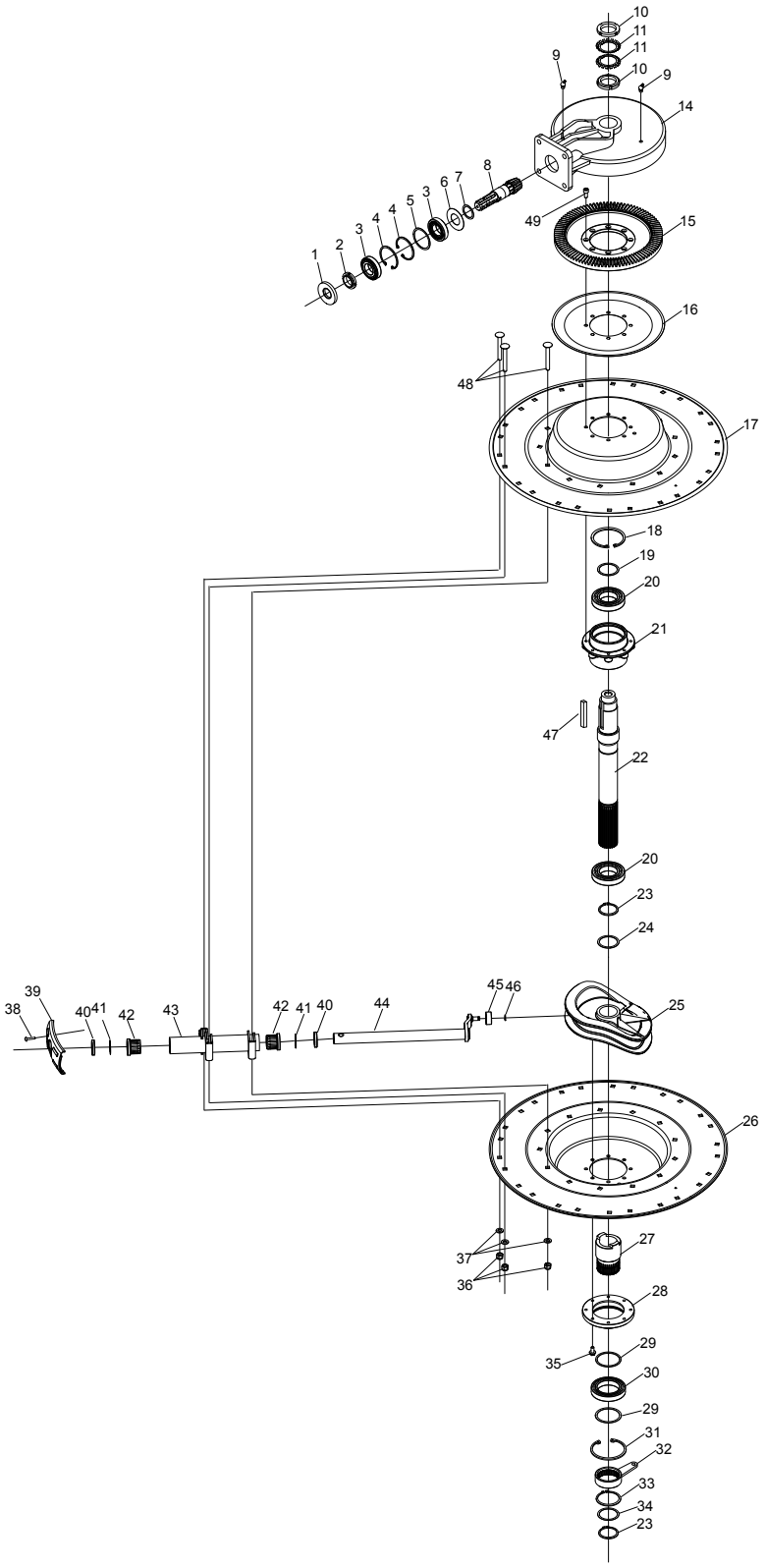

PTO Shaft Assembly

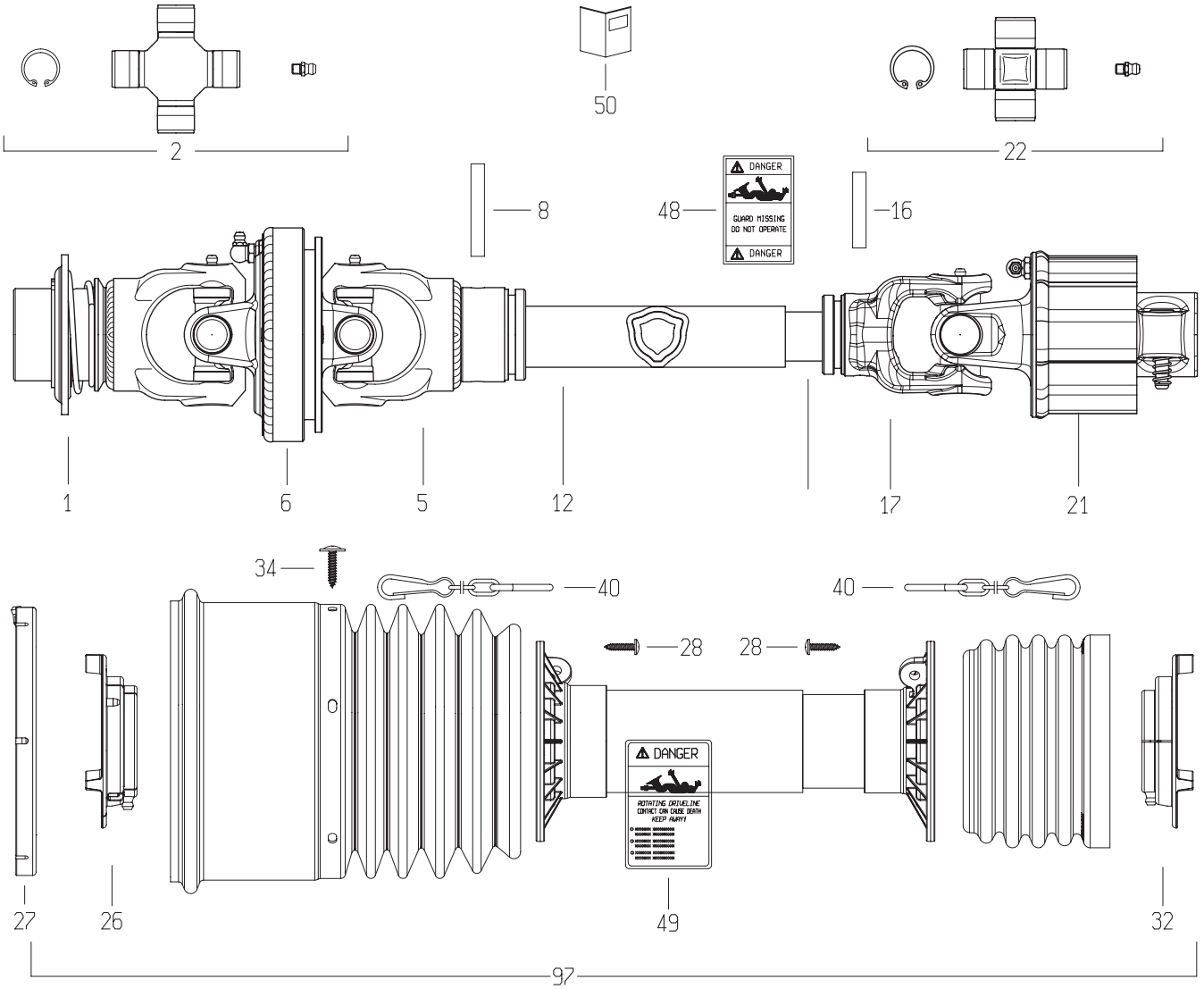

Ref#	Description	Part#
1	Yoke S2 Rt 1-3/8"Z6 80°Cv	503100
2	Cross Kit S2 El 80°Cv 22X76 Zerk In Cap	503101
5	Yoke G2 Outer Tube (36.0) 80°Cv El	503102
6	Central Body 1R2-G2-S2 80°Cv El	503103
8	Flexible Roll Pin 8X55 Din1481	500433
12	Cardan Tube Outer 12518 L=1070	505363
13	Cardan Tube Inner 12504 L=1050 Rilsan.	505364
16	Flexible Roll Pin 8X45 Din1481	903327
17	Tube Yoke #2-G2 Inner (29.0)	503106
21	Sa2/2 Clutch 800Nm 1-3/8"Z6	505365
22	Cross Kit S2-G2 23.8X61.3 Cap Zerk	503108
26	Shield Support G2 Outer Global	503109

Ref#	Description	Part#
27	Shield Support S2-S4 El Cv 80° & 50°	503110
28	Screw 4.8X22 Self Tap Zinc	500417
32	Shield Support G2 Inner Global	503111
34	Screw 4.8X22 Self Tap Zinc Flange Head	503112
40	Shield Chain W/S-Hook L=500Mm	500420
48	Label - Danger - Outer Drive Tube	500421
49	Label - Danger - Outer Shield Tube	500422
50	Instruction Booklet - N.america Global	500423
93	Half Shaft Cleared	505366
94	Half Shaft Cleared	505367
97	Complete Shield Kit	505368

Hydraulic Components

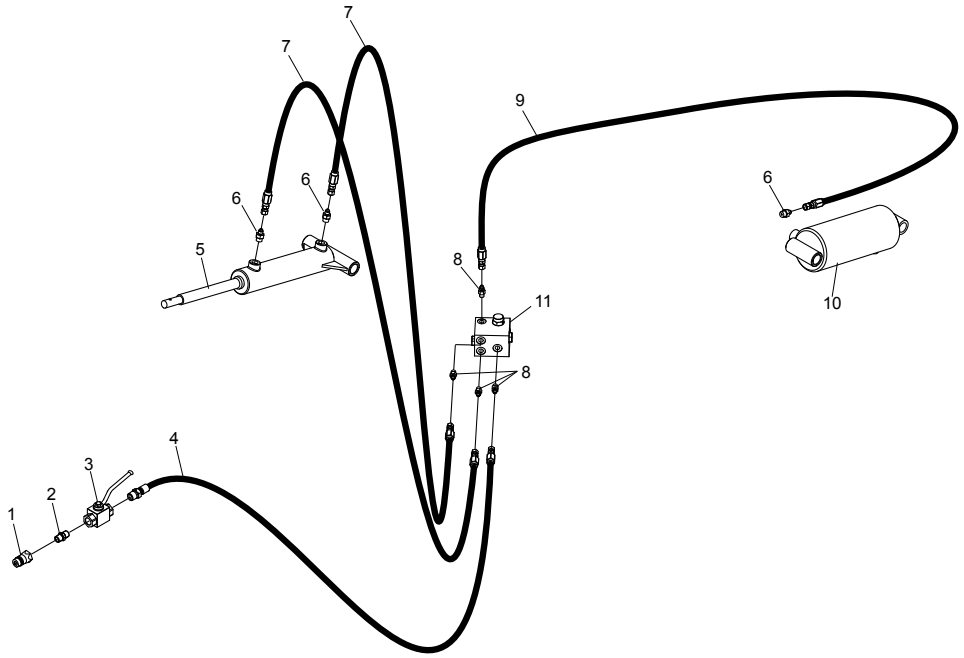

Ref#	Description	Part#	Qty
1	Male Coupler	290105	1
2	Hydraulic Fitting 5404-8-8	502323	1
3	Ball Valve	502322	1
4	Hose	505537	1
5	Front Cylinder	505204	1
6	Hydraulic Fitting 6400-4-6	700908	3
7	Hose	505538	2
8	Hydraulic Fitting 6400-4-4	290195	4
9	Hose	505536	1
10	Rear Cylinder	505167	1
11	Complete Manifold	505540	1

Decals

1 HRS 15 HAYMAKER

2 PEQUEA

3 **IMPORTANT**
To avoid machine damage, do not operate rake or engage PTO when rake is in the raised position or when the guards are raised for transport.

4 **DANGER**
Entanglement in rotating driveline can cause serious injury or death.
Keep all shields in place.
Avoid contact with rotating parts.

5 **CAUTION**
To avoid serious injury:
- Read Operator's Manual before operating, servicing or repairing equipment. Follow all safety rules and instructions. (Manuals are available from your selling dealer.)
- Never allow riders.
- Keep bystanders away from equipment during operation.
- Operate from tractor seat only.
- Keep all shields in place and good condition.
- Lower equipment to ground, stop engine, remove key and set brake before dismounting tractor.
- Never allow children or untrained persons to operate equipment.

6 **CAUTION**
Operate only with 540 rpm PTO

7 **IMPORTANT**
Optimum raking speed is 400-450 PTO RPM.

8 **WARNING**
To help prevent entanglement, stand clear of tines.
Disengage and shut off all engine power before adjusting tine height.

9 **WARNING**
THROWN OBJECTS
Do not operate near people. Debris can be thrown a long distance.

10 **WARNING**
Do not exceed this implement's maximum transport speed of 32km/h (20mph).
Exceeding this speed may result in loss of control during transport or braking and serious injury or death.
Transport only with a properly ballasted tractor and a property attached safety tow chain.
Do not transport with a motor vehicle.
Reduce speed and use additional caution when on inclines, towing under adverse surface conditions, and turning.

11 **WARNING**
High-Pressure hydraulic oil leaks can penetrate skin resulting in serious injury, gangrene, or death.
- Check for leaks with cardboard; never use hand.
- Before loosening fittings: lower load, release pressure, and be sure oil is cool.
- Consult physician immediately if skin penetration occurs.

12 **WARNING**
ROTATE LEVER TO CLOSE
Avoid crushing injuries or loss of control. Close lockup valve before transporting or servicing machine.

13

14

Ref#	Description	Part#	Qty
1	Model Number Decal, HRS15	505234	2
2	Pequea Decal	100162	3
3	Important Decal	903126	1
4	PTO Entanglement	903102	1
5	Caution, General Information	903103	1
6	Caution, 540 RPM	903107	1
7	Important, PTO Speed	903116	1
8	Warning, Prevent Entanglement	903123	2
9	Warning, Thrown Objects	903106	2
10	Warning, Speed	903124	1
11	Warning, Hydraulic Pressure	903114	1
12	Warning, Lock-up Valve	903125	1
13	Decal, Red Retroreflective	903112	2
14	Decal, Amber Retroreflective	903121	1
	Complete Decal Kit, HRS15	505351	1